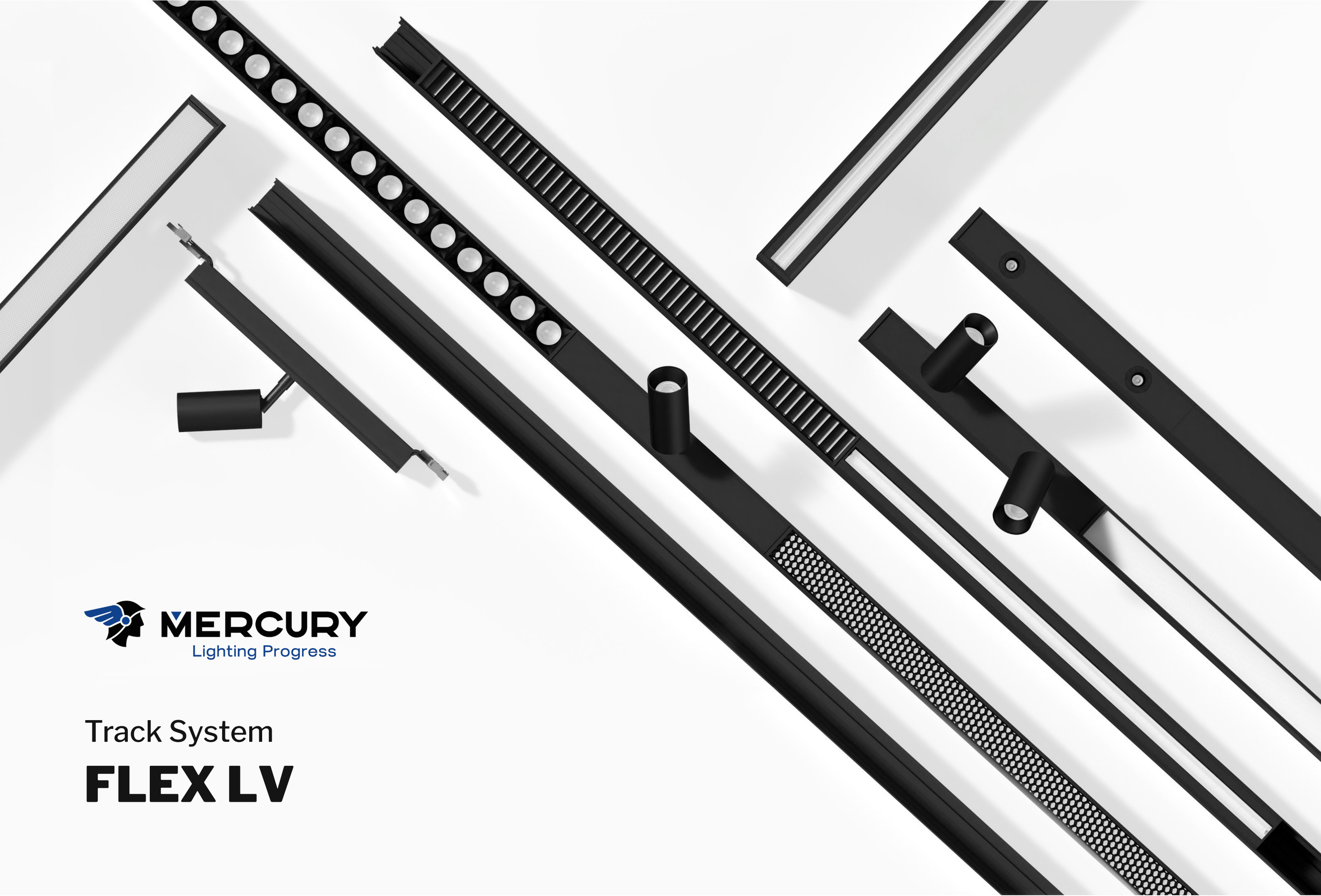

MERCURY
Lighting Progress

Track System

FLEX LV

MERCURY
Lighting Progress

Multifunctional track linear lighting system

Smart High-end Office Lighting

- 2 3/8" wide modular track system, UGR<19 anti-glare and high CRI.
- 11 different optical modules.
- High light efficiency, complied to the new ErP regulation 2019/2020 B grade.
- Systematic solution for use in office, retail, public space.

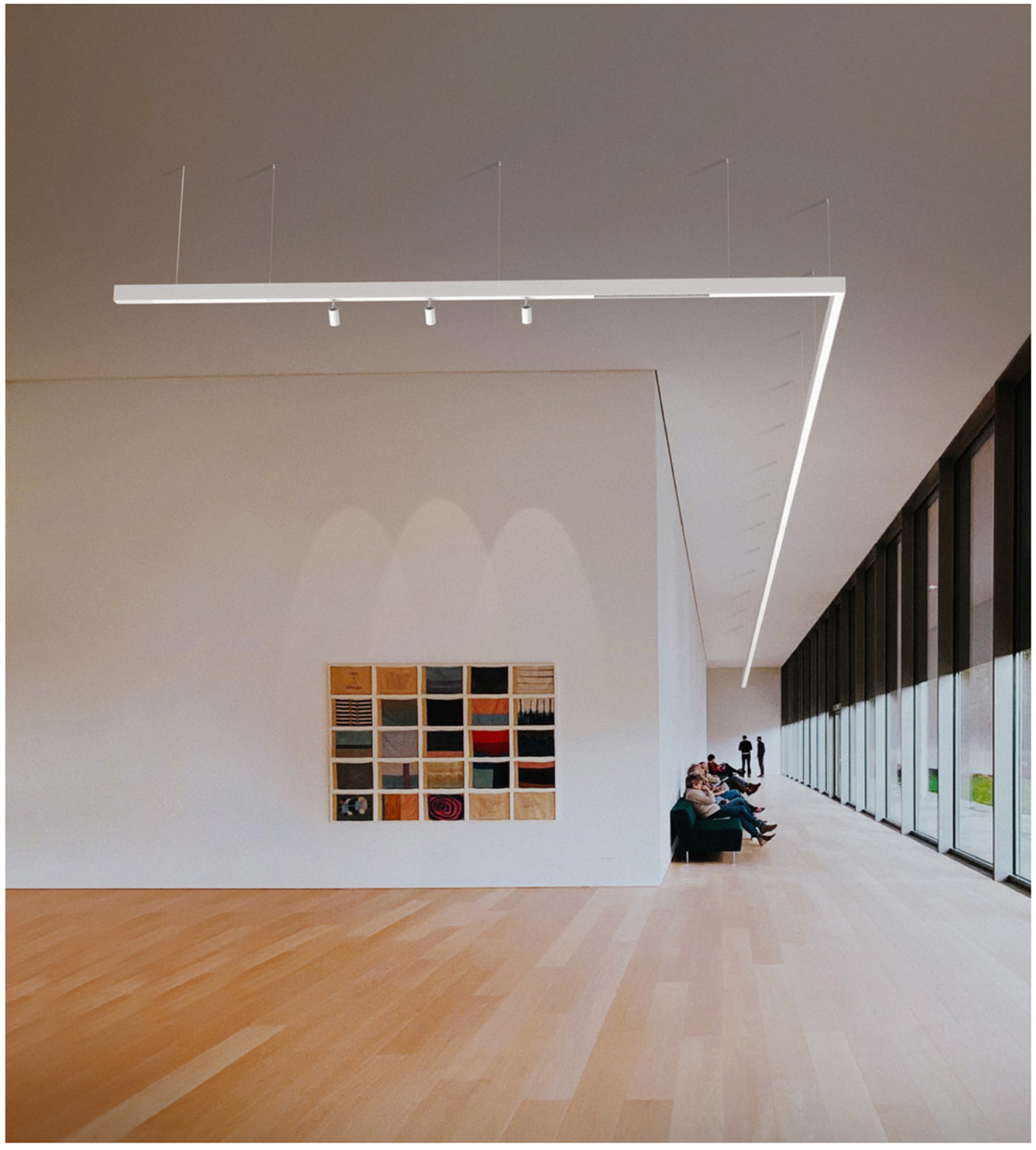

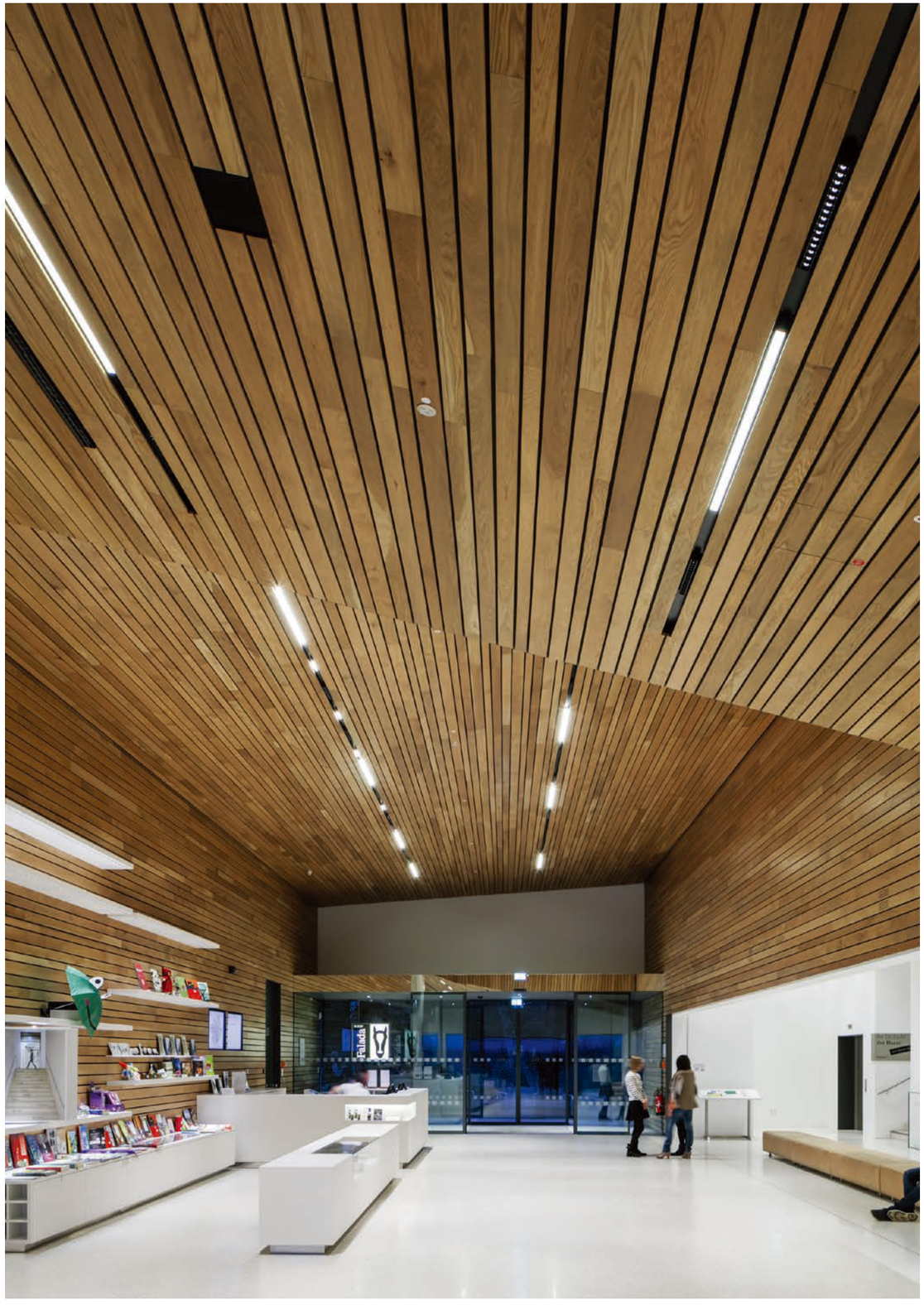

Flex LV Track System Solution

Flex LV is a highly-integrated multi-functional modular track system.
It integrates wiring and modules installation in one, minimizing effort and cost of installation and future maintenance.

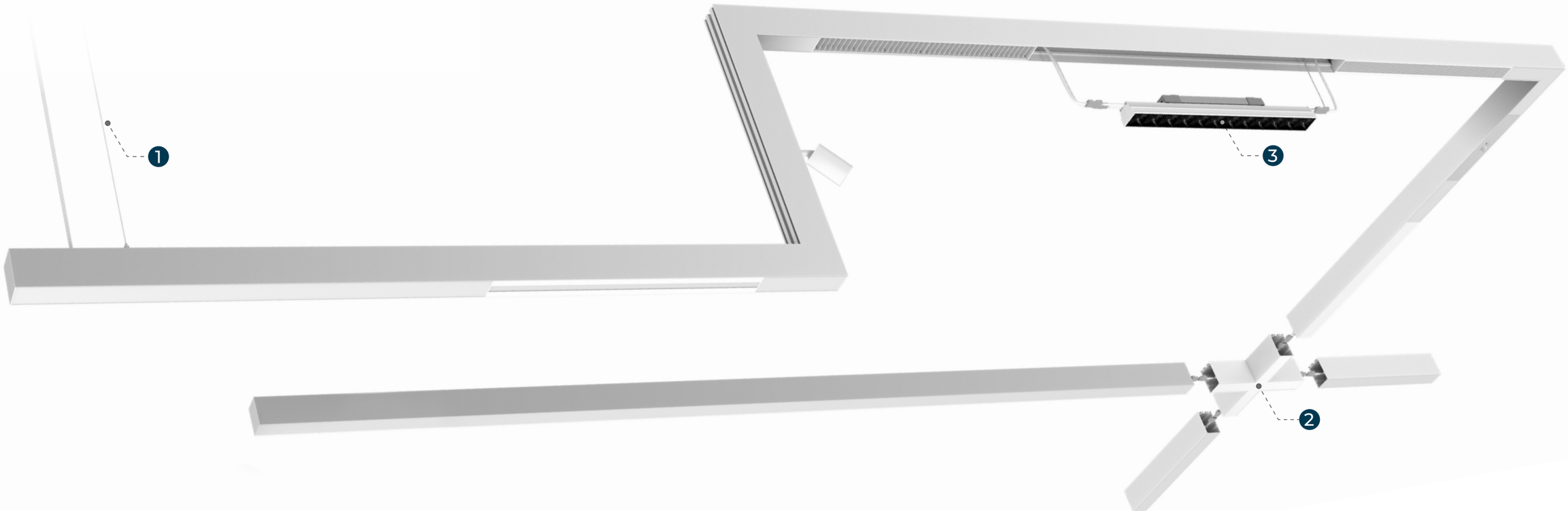

1

TRACK

Installation:
Pendant / Surface mounted

2

CORNER×5

L/ X/ T/ L outer/ L inner corners

3

STANDARD MODULE

Flood lighting and Accent lighting.
UGR<19 deep anti-glare, 145lm/W high efficiency.

WARRANTY 5 years WARRANTY

Installation

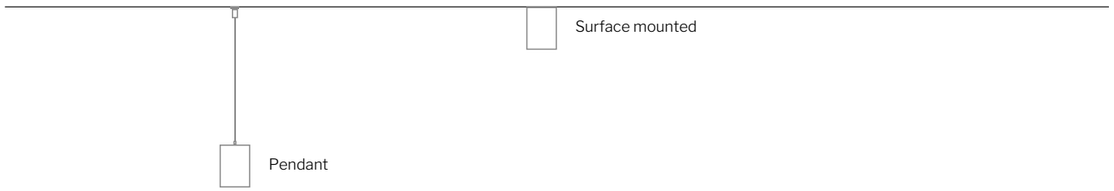

Corner

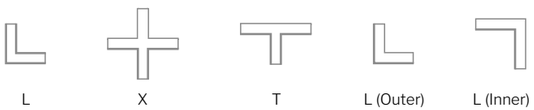

Finishes

Module

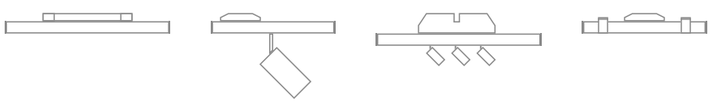

Optics

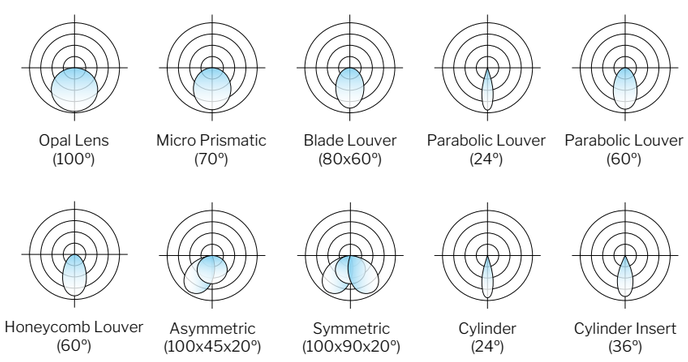

CCT

Dimming

Installation

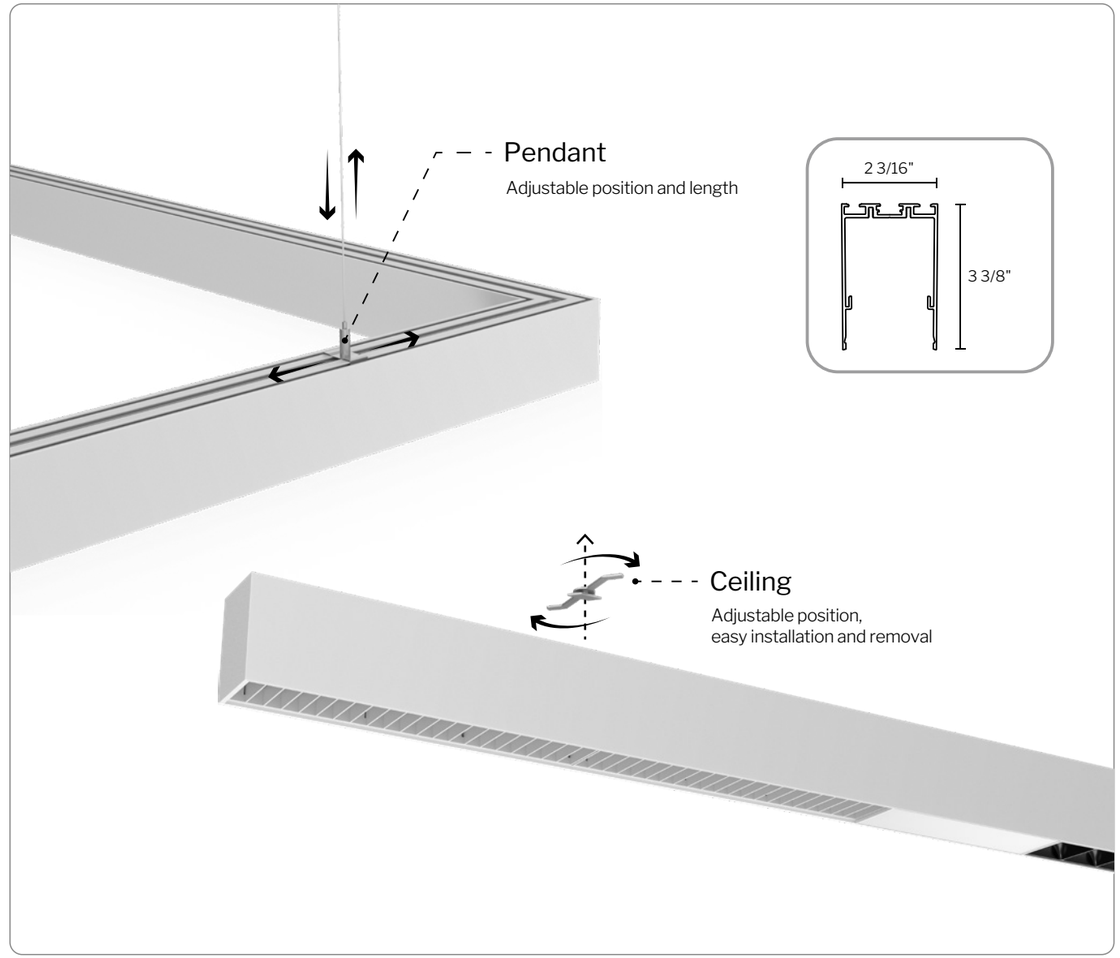

Corners

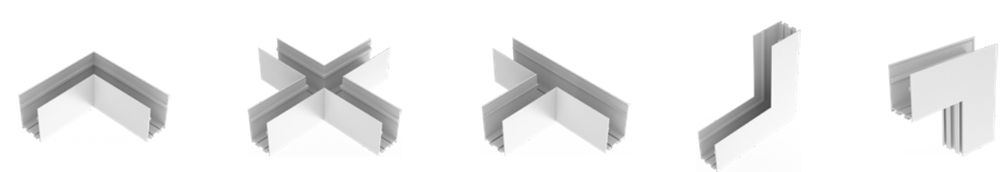

L-Shaped
7 7/8"×7 7/8"×3 3/8"

X-Shaped
13 3/4"×13 3/4"×3 3/8"

T-Shaped
12"×7 3/8"×3 3/8"

L-Shaped Inner
7 7/8"×7 7/8"×3 1/8"

L-Shaped Outer
7 7/8"×7 7/8"×3 1/8"

Modular design, Easy installation

—

Tool-free, easy installation and future replacement
Safety rope for double anti-falling.

Buckle design, Stable interlocking

Click into place, and finish

Four standard lengths

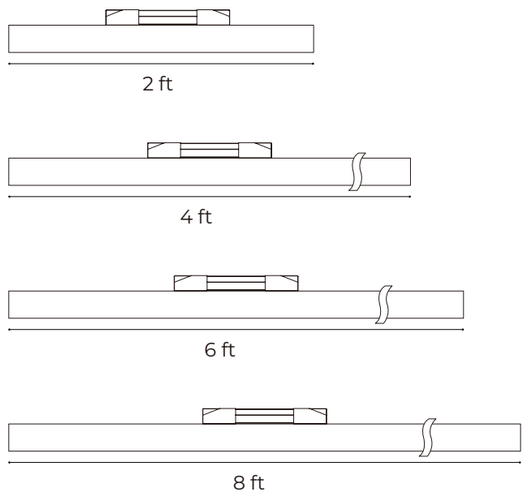

131 1/4 ft link-able, no wiring needed

—

131 1/4 ft driven by one end
Quick and easy electrical connection.

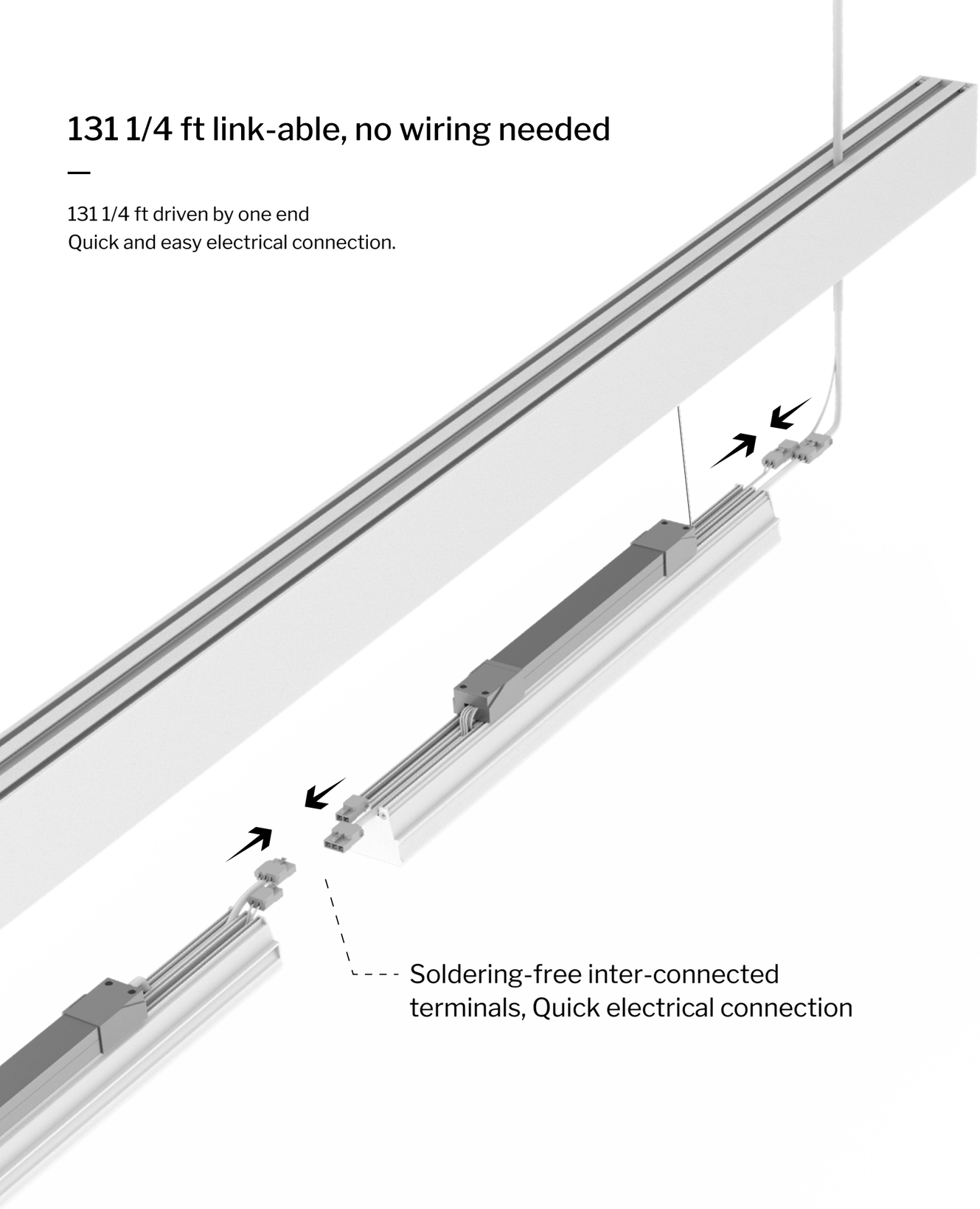

Integrated wiring,
concise and delicate

Standard Integrated Module List

FLOOD LIGHTING

ACCENT LIGHTING

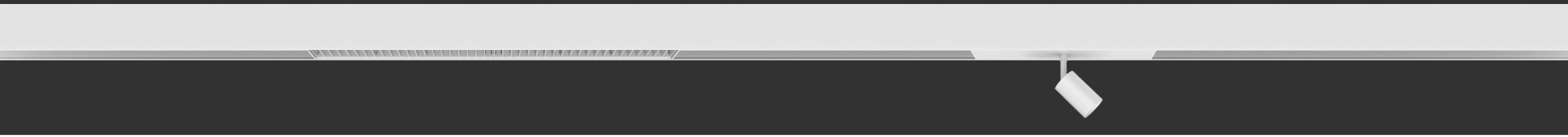

Opal Lens

Micro Prismatic

Blade Louver

Honeycomb Louver

Asymmetric/Symmetric

Parabolic Louver

Cylinder Insert

Cylinder Insert

Cylinder Insert

Cylinder Insert

Professional optics

A variety of optical options are available to meet a variety of needs

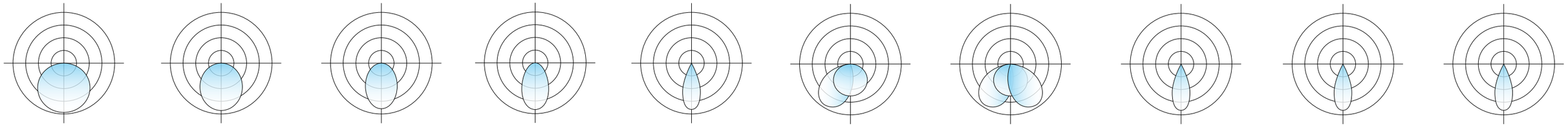

Opal Lens
(100°)

Micro Prismatic
(70°)

Blade Louver
(80°x60°)

Honeycomb Louver
(60°)

Parabolic Louver
(24°/60°)

Asymmetric
(100°x45°x20°)

Symmetric
(100°x90°x20°)

Cylinder Insert
(24°/36°)

Cylinder Insert
(24°/36°)

Cylinder Insert
(24°/36°)

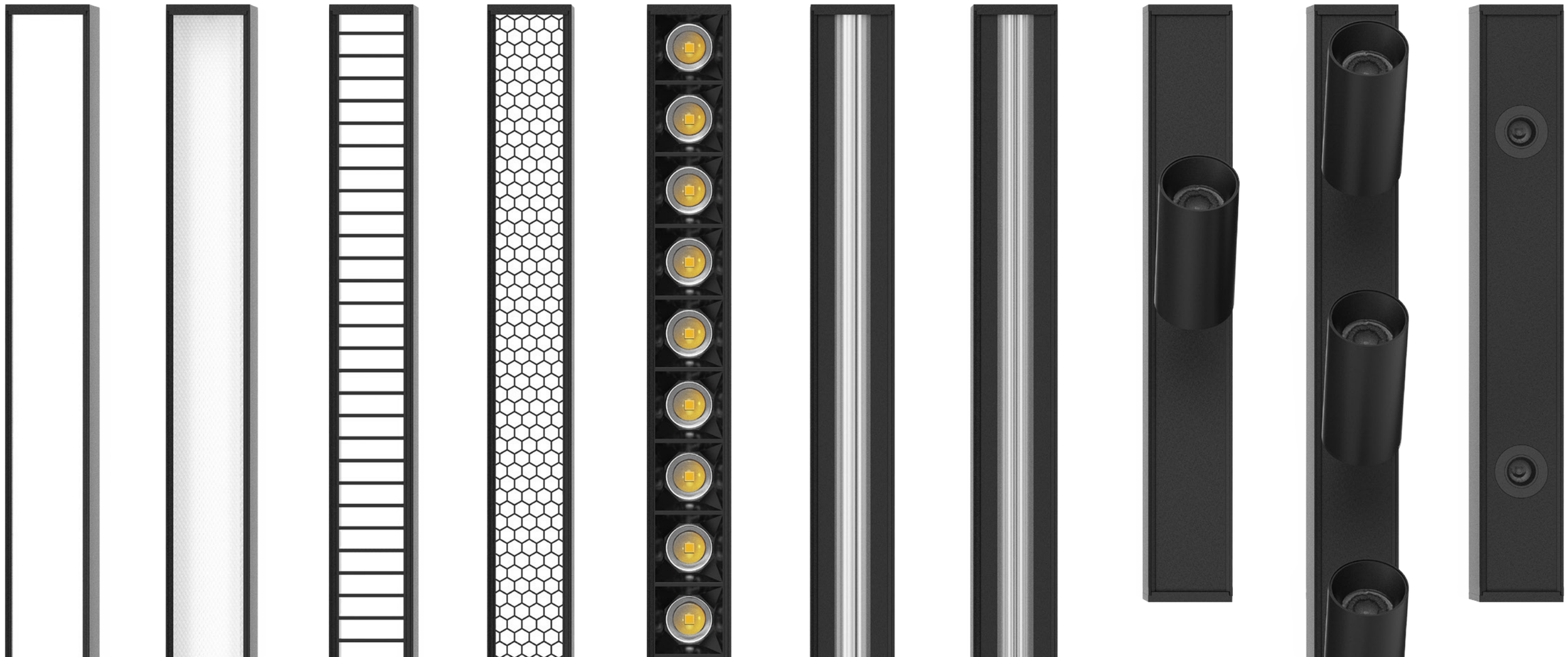

Opal Lens

—

· 145lm/W high efficiency (regular model 112lm/W)
· Complied to ErP (EU) 2019/2020 B grade
· Bridgelux 2835 LEDs, SDCM≤3(ANSI)

145LM/W
Super light efficiency

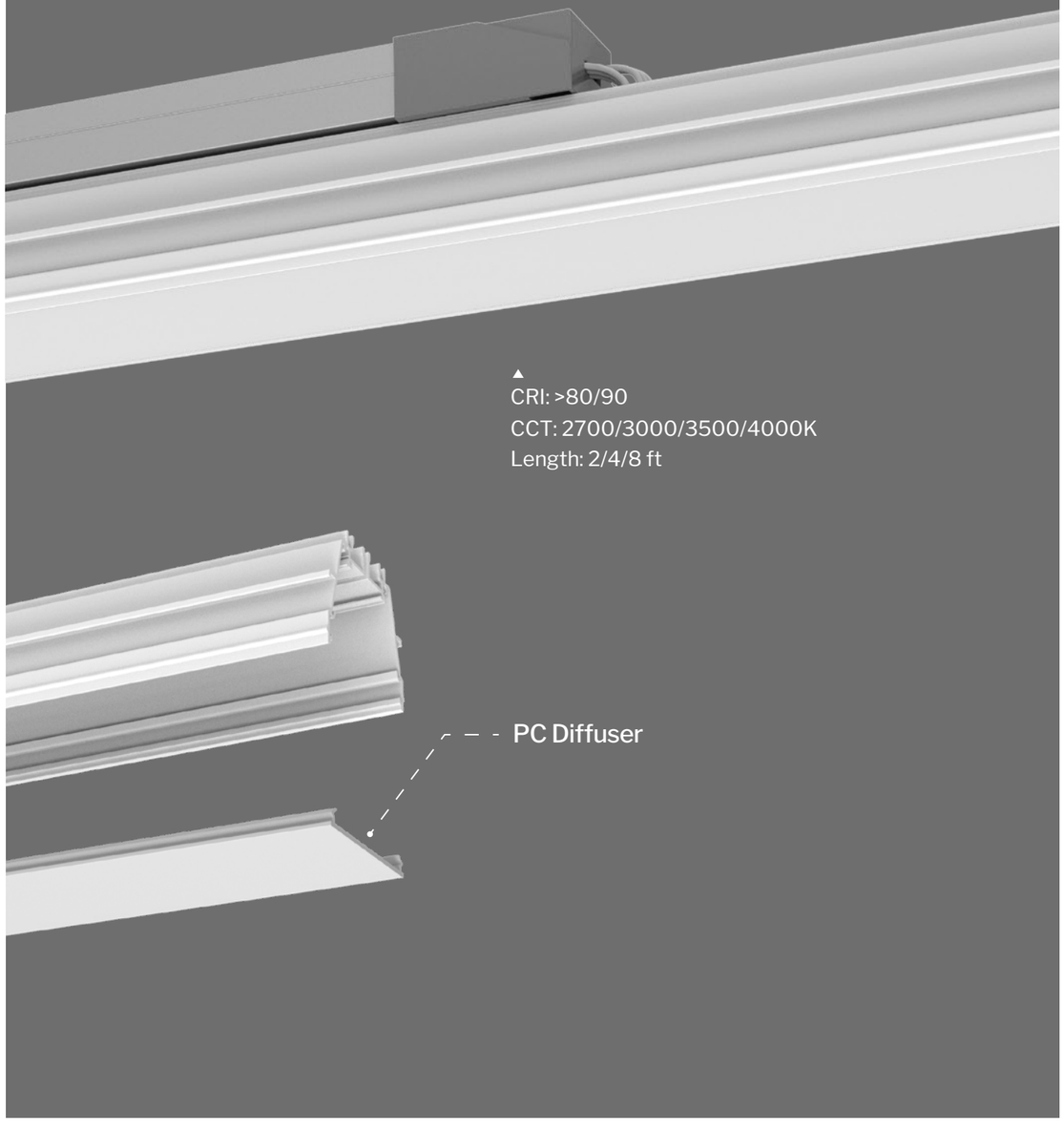

CRI: >80/90
CCT: 2700/3000/3500/4000K
Length: 2/4/8 ft

Micro Prismatic

—

· UGR<19 (X=4H, Y=8H)
· Micro-structure anti-glare plate
· Bridgelux 2835 LEDs, SDCM≤3(ANSI)
· 90lm/W efficiency

UGR<19
Deep anti-glare

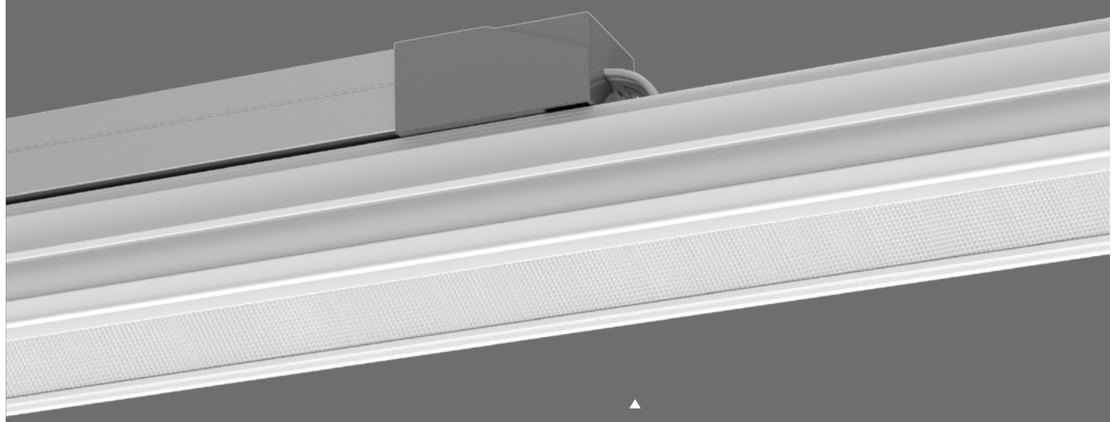

CRI: >80/90
CCT: 2700/3000/3500/4000K
Length: 2/4/6 ft

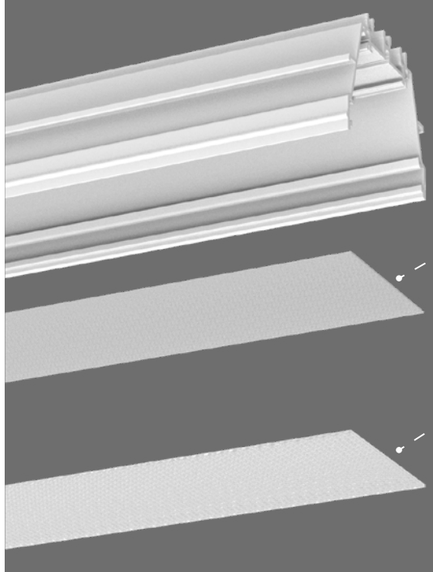

Micro-diffusion film

Micro-structure anti-glare plate

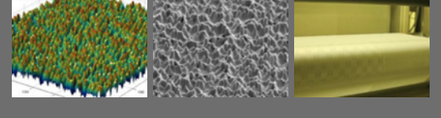

Use precision equipment to imprint optical micro-structure onto the transparent film to achieve ultra-thin outlook and precise light control.

Blade Louver

—

· UGR<19 (X=4H, Y=8H)
· Bridgelux 2835 LEDs, SDCM≤3(ANSI)
· 70lm/W efficiency

UGR<19
Deep anti-glare

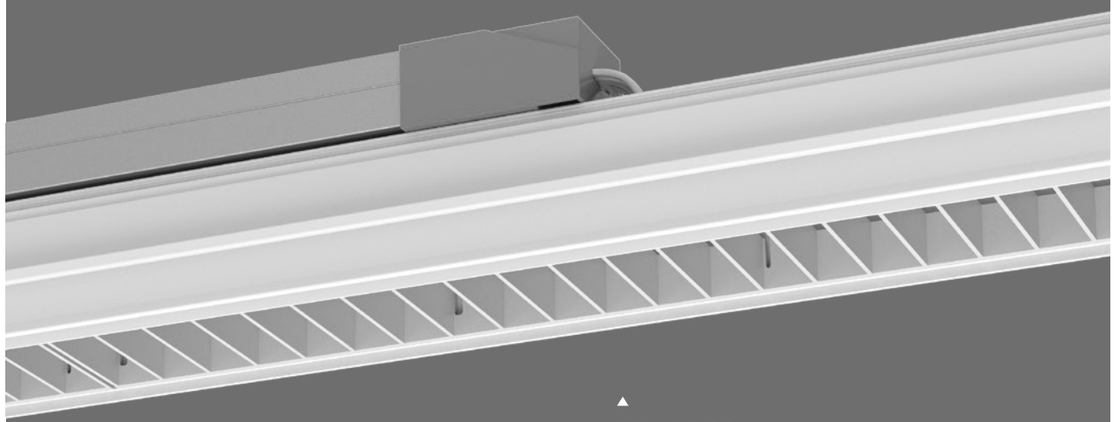

CRI: >80/90
CCT: 2700/3000/3500/4000K
Length: 2/4/8 ft

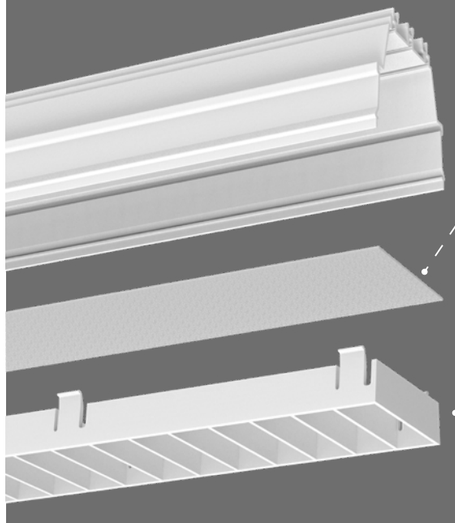

Micro-structure anti-glare plate

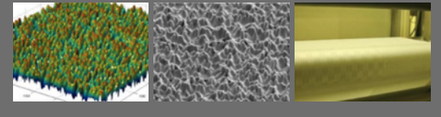

Use precision equipment to imprint optical micro-structure onto the transparent film to achieve ultra-thin outlook and precise light control.

Louver

Shielding angle > 30°, uniform and soft lighting

Honeycomb Louver

· UGR<19 (X=4H, Y=8H)
· Micro-structure anti-glare plate
· Bridgelux 2835 LEDs, SDCM≤3(ANSI)
· 60lm/W efficiency

UGR<19
Deep anti-glare

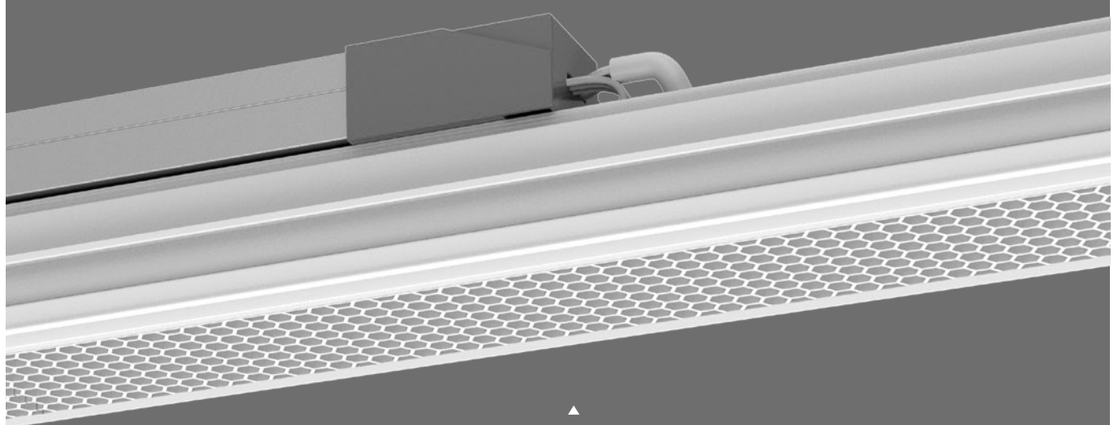

CRI: >80/90
CCT: 2700/3000/3500/4000K
Length: 2/4/8 ft

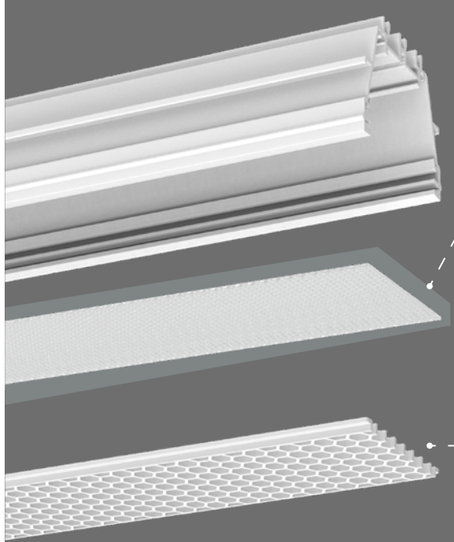

Micro-structure anti-glare plate

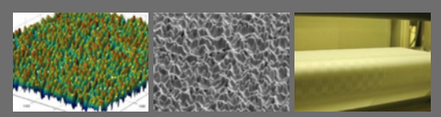

Use precision equipment to imprint optical micro-structure onto the transparent film to achieve ultra-thin outlook and precise light control.

Honeycomb

Shielding angle > 30°, uniform and soft lighting

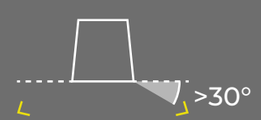

Parabolic Louver

· UGR<10
· Bridgelux COB LEDs, SDCM≤3(ANSI)
· Angle: 24°/38°
· 90lm/W efficiency
· Precise light control, high light utilization

UGR<10
Deep anti-glare

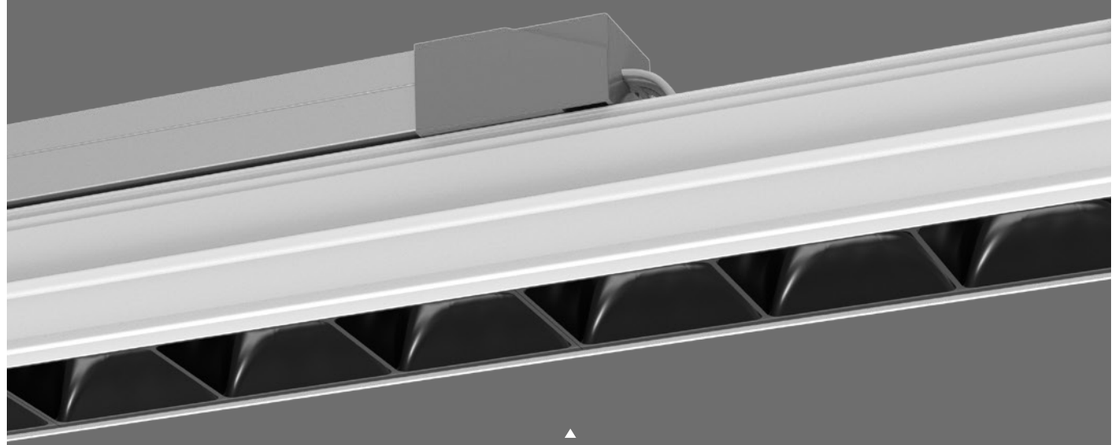

CRI: >80/90
CCT: 2700/3000/3500/4000K
Length: 2/4/8 ft

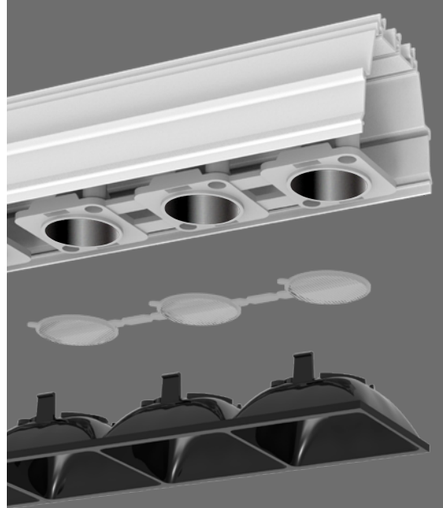

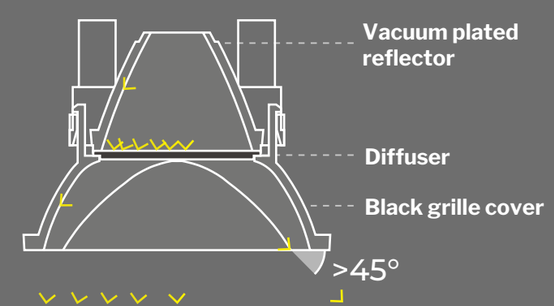

Asymmetric

—

· 116lm/W efficiency
· Asymmetric angle 20° (support 2-3m wall washing height)
· Bridgelux 2835 LEDs, SDCM≤3(ANSI)

CRI: >80/90
CCT: 2700/3000/3500/4000K
Length: 4/6/8 ft

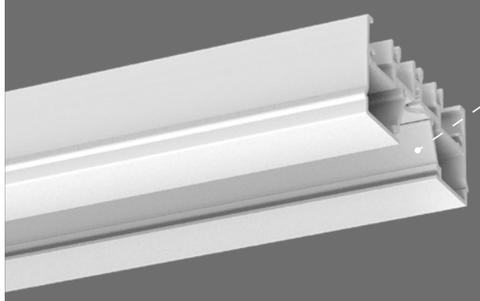

Reflective paper

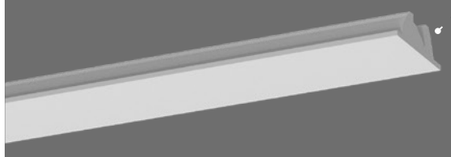

Polarized lens

Change light path and re-distribute light via professional optical design

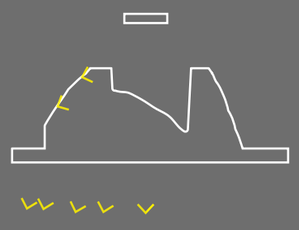

Cylinder Insert

—

· UGR<10
· Bridgelux COB LEDs, SDCM≤3(ANSI)
· Angle: 24°/36°
· 50/80lm/W efficiency
· 0°-355° adjustable horizontally
· 0°-90° adjustable vertically

UGR<10
Deep anti-glare

CRI: >90
CCT: 2700/3000/3500/4000K
Length: 16"

Cylinder Insert

—

· UGR<10
· OSRAM 3535 LEDs
· Angle: 24°/36°
· 80lm/W efficiency

UGR<10
Deep anti-glare

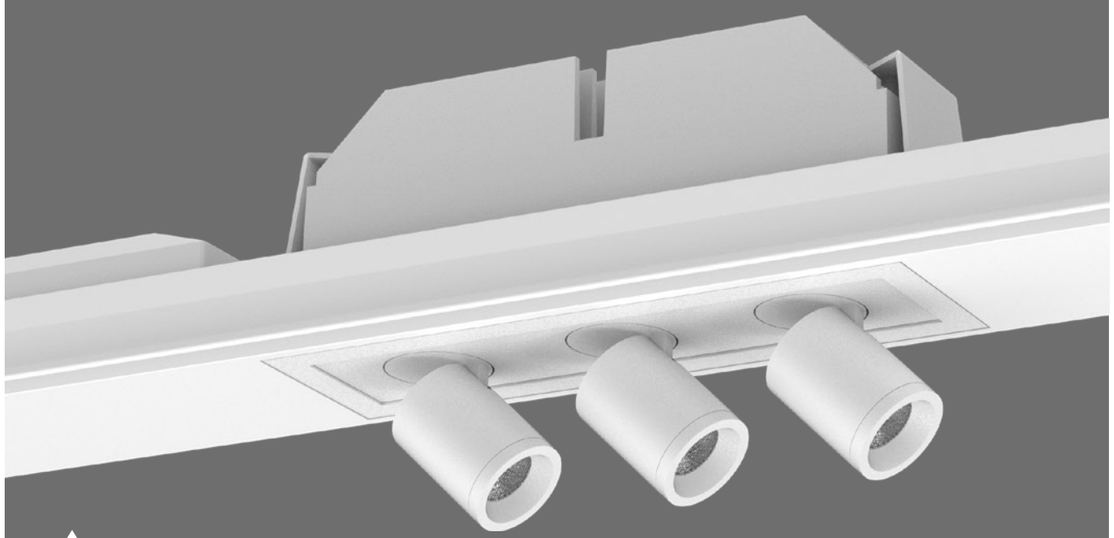

▲
CRI: >90
CCT: 2700/3000/3500/4000K
Length: 17"

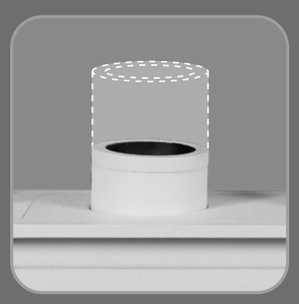

Stretchable & retractable

355° rotable horizontally

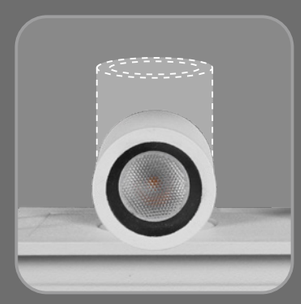

0-90° adjustable vertically

Cylinder Insert

—

· UGR<10
· Bridgelux COB LEDs, SDCM≤3(ANSI)
· Angle: 24°/36°
· 60lm/W efficiency
· Precise light control, uniform & soft light

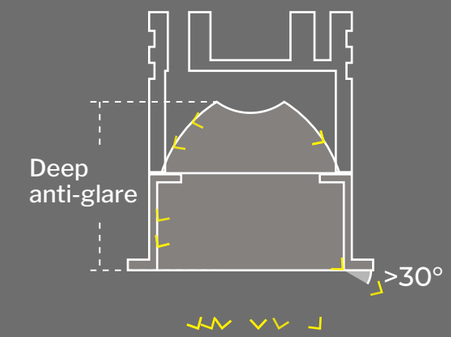

UGR<10
Deep anti-glare

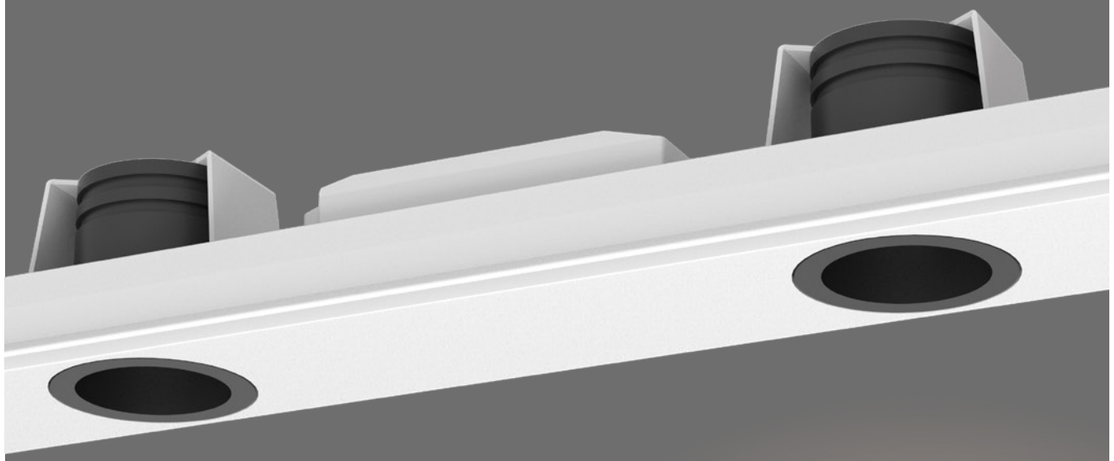

▲
CRI: >90
CCT: 2700/3000/3500/4000K
Length: 16"

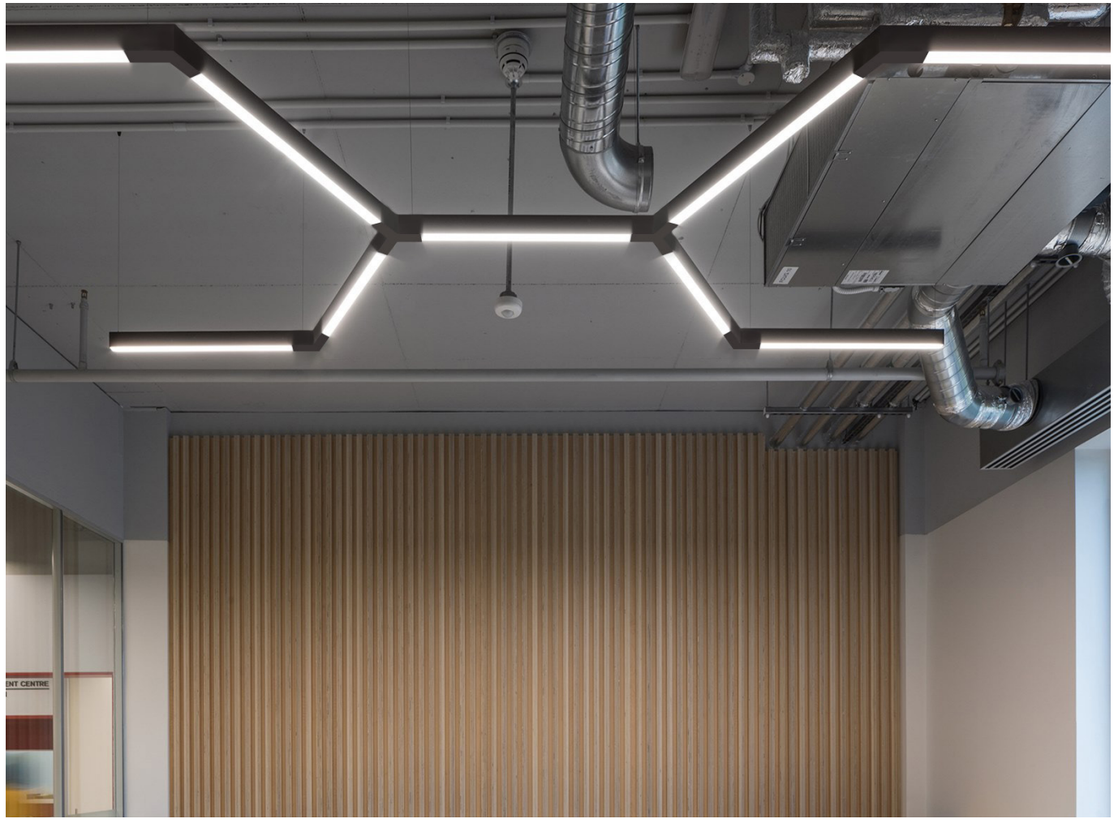

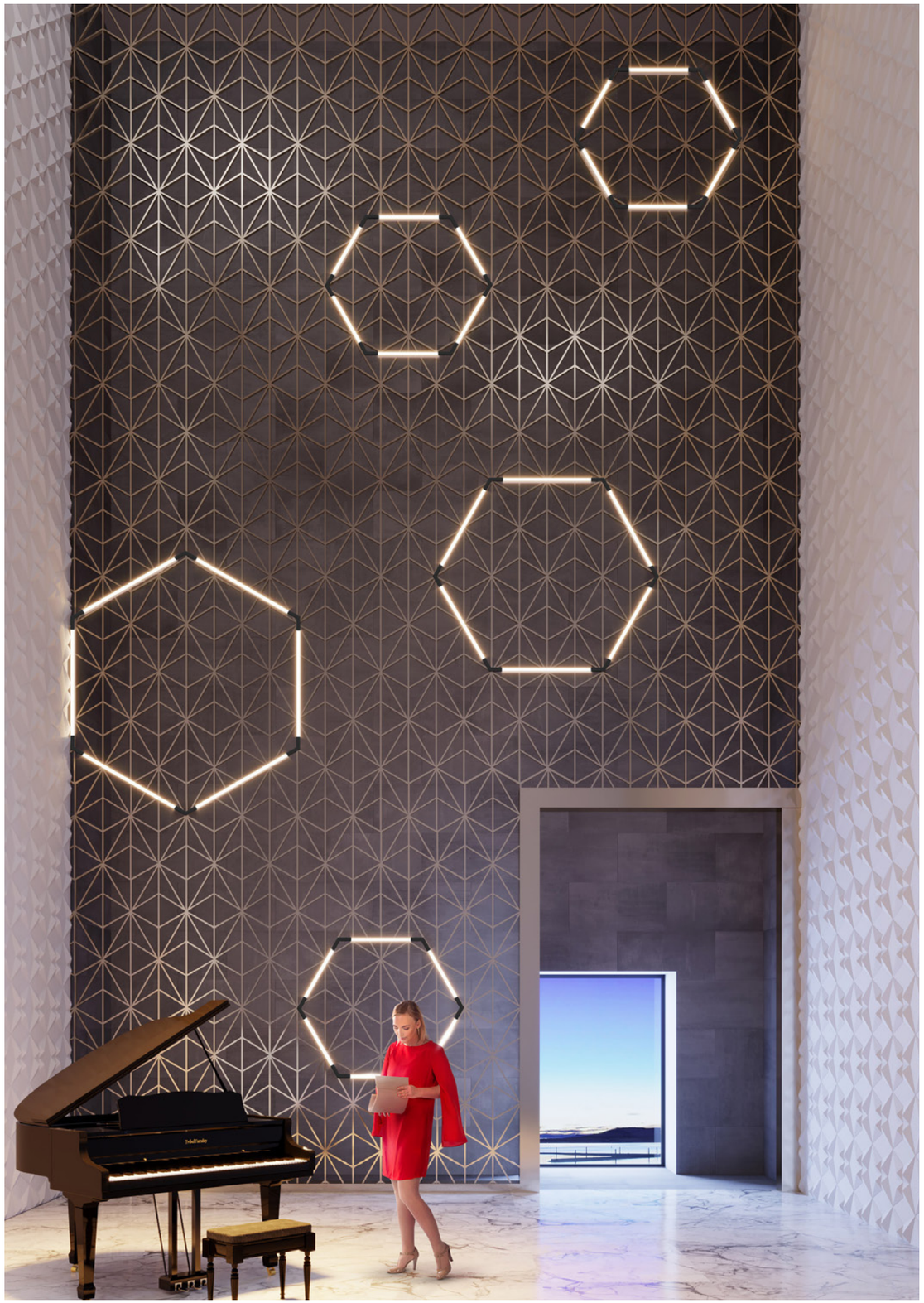

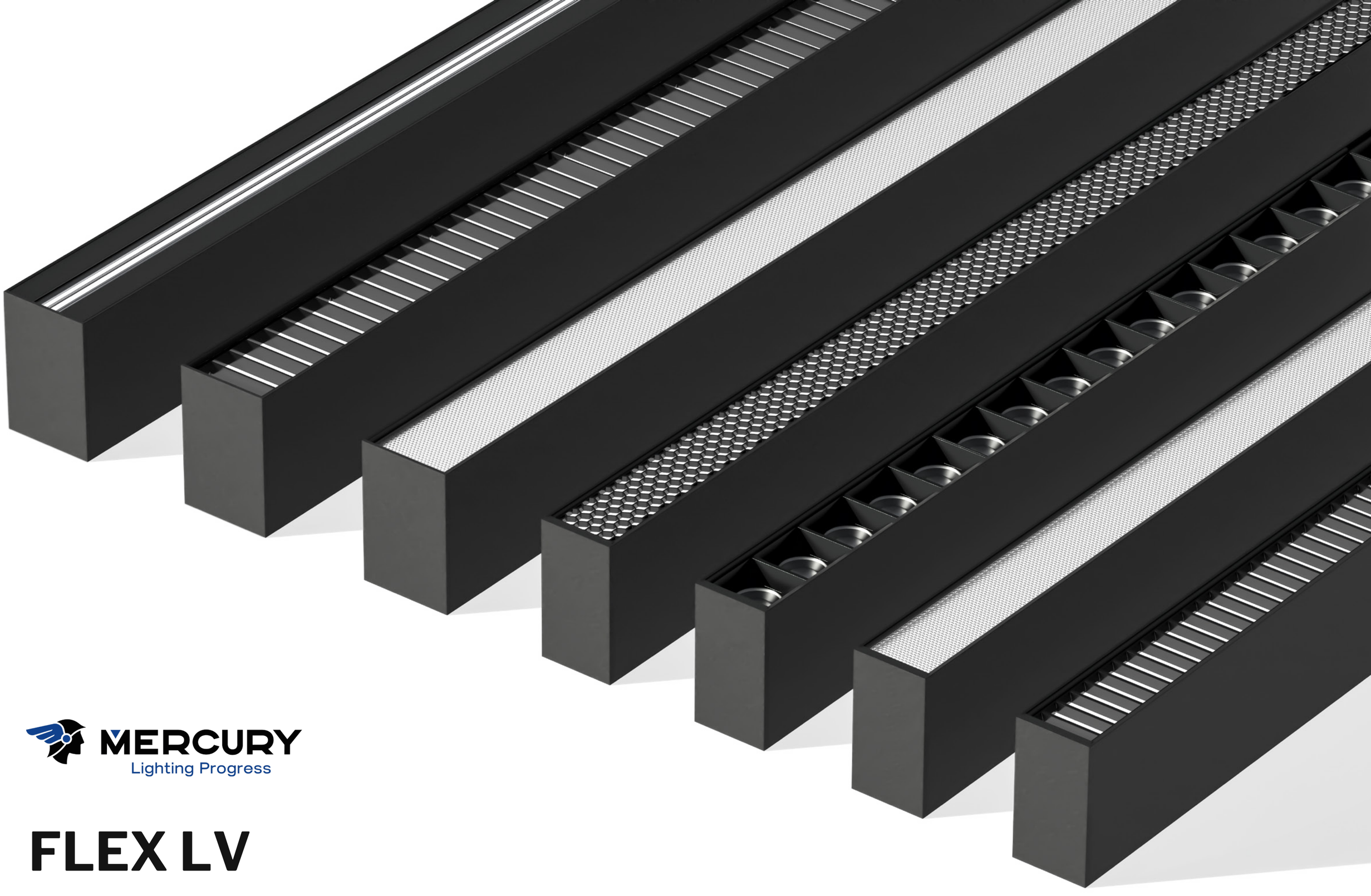

MERCURY
Lighting Progress

FLEX LV