Combination Ceiling Details

MLS2-G/Grid One Side + Optional Other Side

9/16" GRID + TILE

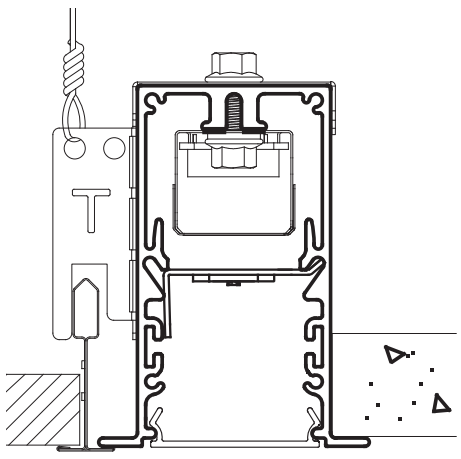

15/16" GRID + TILE

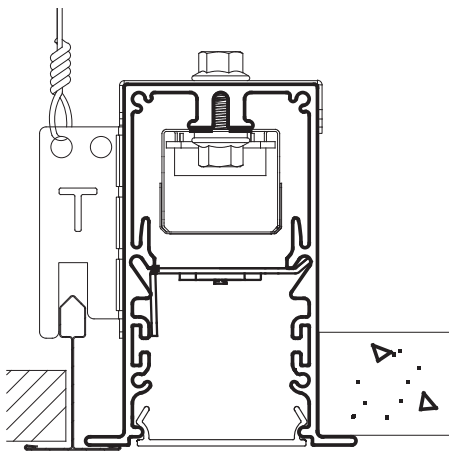

T 9/16" GRID + TILE

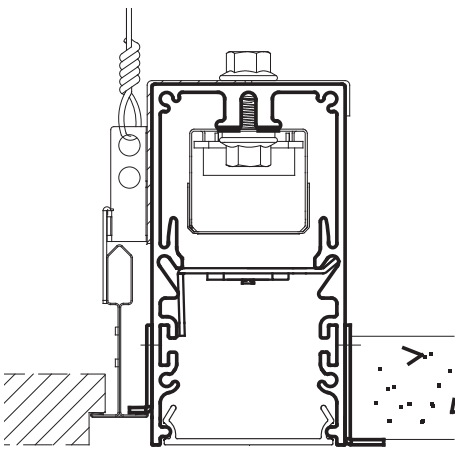

T 15/16" GRID + TILE

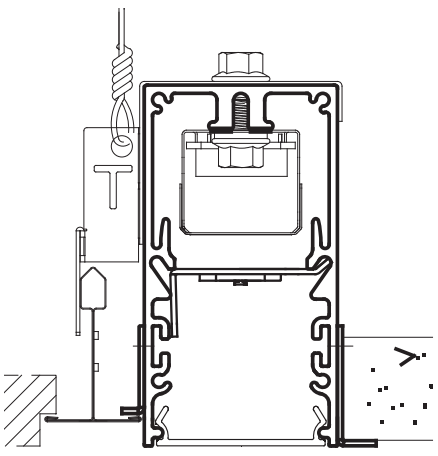

SCREW SLOT GRID + TILE

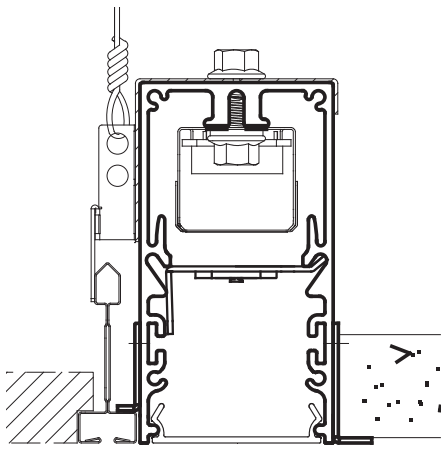

T 9/16" GRID + TEGULAR TILE

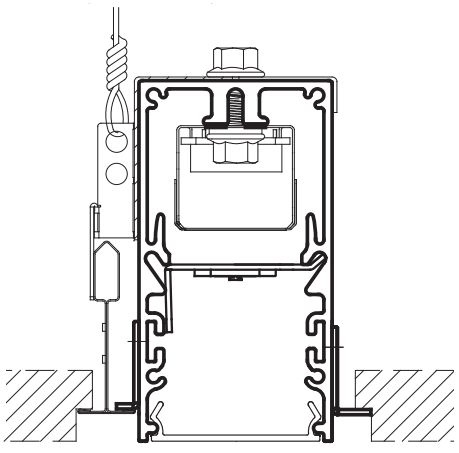

T 15/16" GRID + TEGULAR TILE

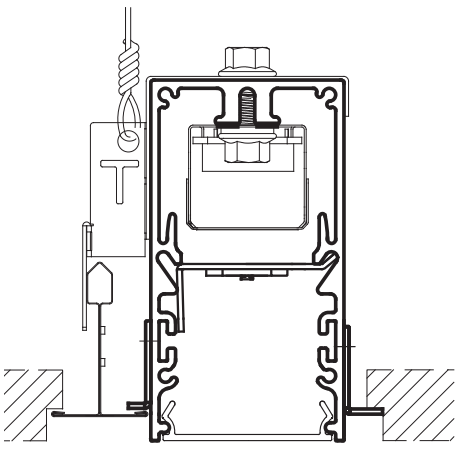

SCREW SLOT GRID + TEGULAR TILE

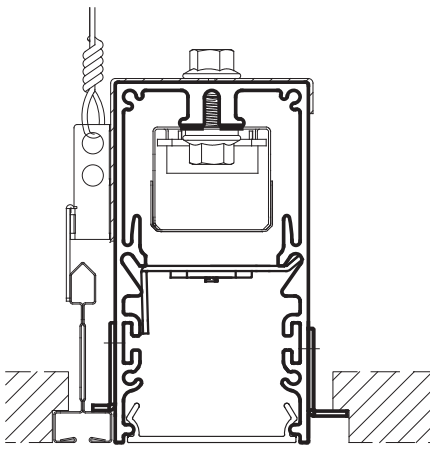

9/16″ GRID + N1 (1/2" GYP)
9/16″ GRID + N5 (5/8" GYP)

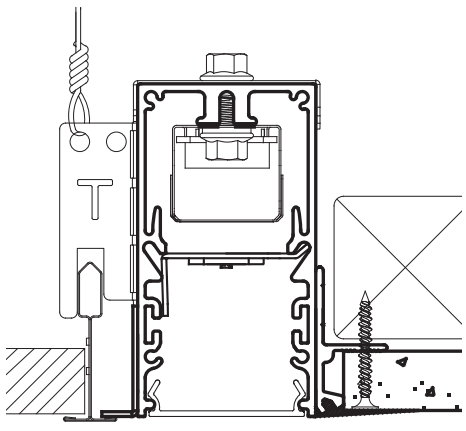

15/16" GRID + N1 (1/2" GYP)
15/16" GRID + N5 (5/8" GYP)

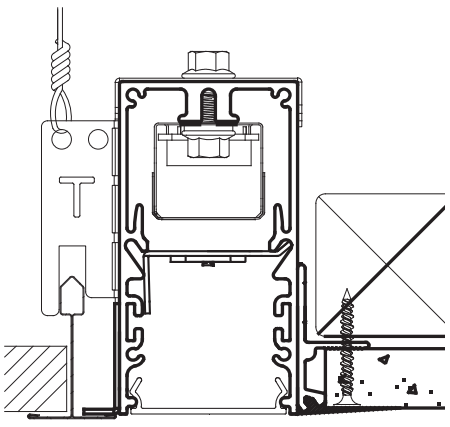

T 9/16" GRID + N1 (1/2" GYP)
T 9/16" GRID + N5 (5/8" GYP)

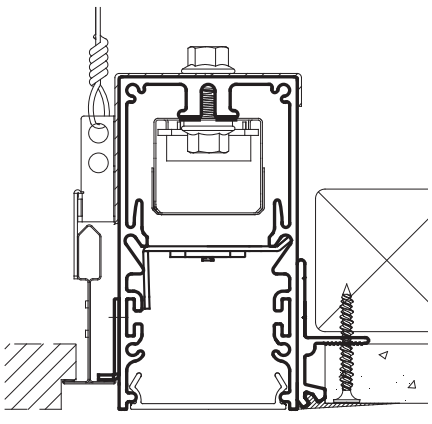

T 15/16" GRID + N1 (1/2" GYP)
T 15/16" GRID + N5 (5/8" GYP)

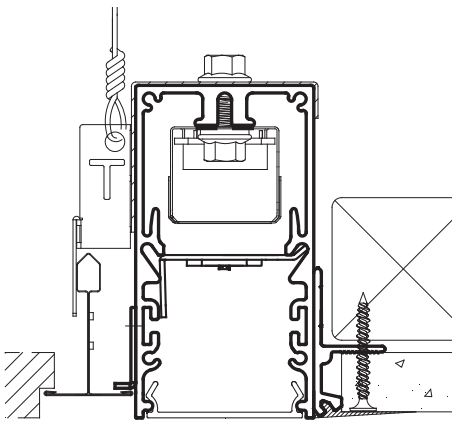
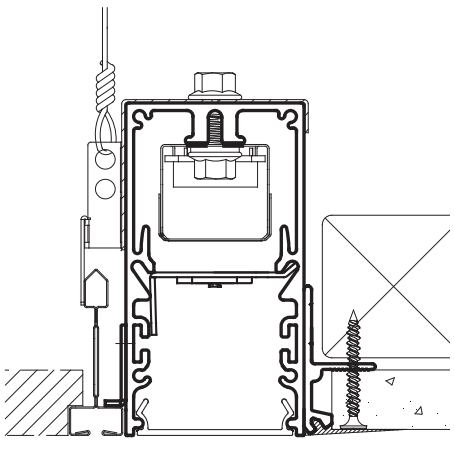
SCREW SLOT GRID + N1 (1/2" GYP)
SCREW SLOT GRID + N5 (5/8" GYP)