MLR2

REGRESSED LENS
RECESSED MOUNT FOR DRYWALL & GRID CEILINGS

Made in USA

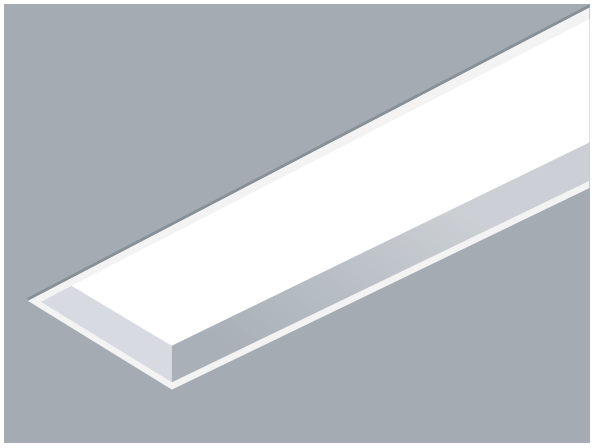

FEATURES

- Extruded aluminum housing.
- Narrow 1 7/8" wide profile.
- Linear lengths of 2ft and above in increments of 1/16 of an inch.
- Continuous runs and welded patterns available.
- Custom formulated high diffusion extruded acrylic lens.
- Architecturally-pleasing 3/4" regression.
- Non-glare matte-white polyester powder coating finish.
- Recessed for various ceiling types.
- Standard and custom set lumens-per-foot performances.
- 80 CRI standard. 90 CRI available.
- Continuous dimming capability down to 1% on 0-10V controls.
- IC rated.
- CCEA option available.
- Fixture lumens per watt ratios up to 89.
- Tunable white feature optional.
- American made.
- Lightning Program eligible (ships in 15 days or less): See ordering data for options.

SHAPES/PATTERNS

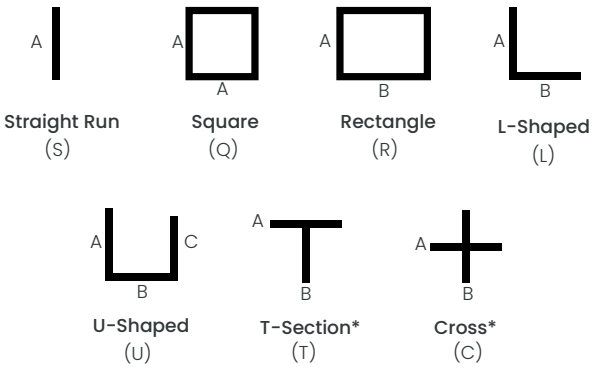

*Please consult factory to confirm design and layout will comply with specified ceiling
For other shapes/patterns/runs consult the factory.

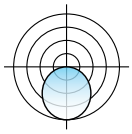

Direct diffuser

IC RATED

CHICAGO CCEA PLENUM WHEN SPECIFIED

tunable WHITE 27K 65K

Fixture type:	Job information:

PERFORMANCE - HTA

Based on 4Ft. Module, 3500K, 80 CRI, HTA diffuser.
Signify LV6 LED Boards.

Lumens per Foot (LF)	Delivered Lumens (L)	System Watts (W)	Lumens per Watt (LPW)
400	1600	18.0	89
500	2000	22.8	88
625	2500	28.9	87
800	3200	36.6	87

Actual performance may differ by +/- 5% when operating between 120V-277V +/- 10%. Consult Factory for 90 CRI performances.

DELIVERING UP TO 89 LUMENS PER WATT

Multiplier for other Color Temp (K)
3000K 97%
3500K 100%
4000K 102%
5000K 103%

PERFORMANCE - ASO

Based on 4Ft. Module, 3500K, 80 CRI, ASO diffuser.
Signify LV6 LED Boards.

Lumens per Foot (LF)	Delivered Lumens (L)	System Watts (W)	Lumens per Watt (LPW)
400	1600	22.1	72
500	2000	28.0	71
600	2400	34.0	71

Actual performance may differ by +/- 5% when operating between 120V-277V +/- 10%. Consult Factory for 90 CRI performances.

DELIVERING UP TO 72 LUMENS PER WATT

Multiplier for other Color Temp (K)
3000K 97%
3500K 100%
4000K 102%
5000K 103%

MLR2

REGRESSED LENS
RECESSED MOUNT FOR DRYWALL & GRID CEILINGS

MERCURY Lighting Products

ORDERING MATRIX INFORMATION

All options highlighted in BLUE are eligble for Lightning Program (same quality product, shipped in 15 days or less)

Ex: MLR2-S-144-S18-800-35K-HTA-1-U-EM12-WL-SR-AU

1		2		3		4		5		6		7		8		9		10		11		12
	-		-		-		-		-		-		-		-		-		-		-	

1 SERIES

- ☐ **MLR2** LightStreams 2
- ☐ **LP-MLR2** Lightning Program

2 MOUNTING

- ☐ **N5** Trimless 5/8"
- ☐ **N1** Trimless 1/2"
- ☐ **F** Flange Trim for drywall
- ☐ **G9** Grid 9/16" flat T grid
- ☐ **G15** Grid 15/16" flat T grid
- ☐ **S** Screw Slot
- ☐ **SI** 9/16" Interlude
- ☐ **T9** 9/16" Tegular
- ☐ **T15** 15/16" Tegular

3 LENGTH

- ☐ **48** 48" Length
- ☐ **96** 96" Length
- ☐ **144** 144" Length

Custom or Row Length. 24" and above in 1" Increments. Ex. in inches: 82, 384, etc.

4 SHAPE (ENTER LENGTH IN PRODUCT CODE ABOVE)

- ☐ **S__** Individual/Straight Run Section (enter length, ex. S18)
- ☐ **Q__** Square Configuration (enter side length A, ex: Q18)
- ☐ **R__/__** Rectangular Configuration (enter side lengths A and B, ex. R12/24)
- ☐ **L__/__** L-Shaped Configuration (enter side lengths A and B, ex. L12/24)
- ☐ **U__/__/__** U-Shaped Configuration (enter side lengths A, B, and C, ex. U12/12/24)
- ☐ **T__/__** T-Section* (enter side lengths A and B, ex. T12/24)
- ☐ **C__/__** Cross Configuration* (enter side lengths A and B, ex. C12/24)

All corners of shape must be 90°, same plane.
Lengths greater than 8' consist of multiple individual housing sections joined together. Lengths are nominal and may vary based on lamping and other specification selections.
Consult Mercury when exact lengths are required.
Consult factory for corners other than 90°
*Please consult factory to confirm design and layout will comply with specified ceiling

OPTIONS

5 LUMENS/FT

HTA
- ☐ **400**
- ☐ **500**
- ☐ **625**
- ☐ **800**

ASO
- ☐ **400**
- ☐ **500**
- ☐ **600**

Custom Lumen Packages.

6 COLOR TEMP-CCT

80 CRI
- ☐ **30K** 3000K
- ☐ **35K** 3500K
- ☐ **40K** 4000K
- ☐ **50K** 5000K Upon request
- ☐ **TW** Tunable White 2700K-6500K

90 CRI
- ☐ **927K** 2700K
- ☐ **930K** 3000K
- ☐ **935K** 3500K
- ☐ **940K** 4000K

7 DIFFUSER

- ☐ **HTA** High Transmission Acrylic
- ☐ **ASO** Acrylic Smooth Opal (Performance is reduced with this diffuser

8 DRIVER

- ☐ **1** 0-10V 1% Dimming
- ☐ **1DD** 0-10% Dimming Dim to Dark
- ☐ **eL** eldoLED Solo 0.1%
- ☐ **LDE1** Lutron Hi- Lume
- ☐ **-** As Specified

9 VOLTAGE

- ☐ **U** Uni 120-277V
- ☐ **1** 120V
- ☐ **7** 277V

Please verify at the time of release if 120V or 277V is required. Although drivers are universal voltage, a specific voltage is required to determine amp draw as well as voltage specific flexes and/or plug thrus as needed.

10 STANDBY MODULES

- ☐ **EM10** Emergency Battery 10W
- ☐ **EM12** Emergency Battery 12W
- ☐ **NO OPTION**

Available in modules of 4-ft. and longer.

OPTIONS

11 MISC.

- ☐ **WL** UL "Suitable for Wet Locations" labeled
- ☐ **CCEA** Meets the City of Chicago Environmental Air specifications.
- ☐ **BABA** Consult factory.

12 SENSOR READY

- ☐ **SR** Sensor Ready

Required for Certain Controls, Contact Mercury Lighting

13 LIGHTING CONTROLS

- ☐ **AU** Autani
- ☐ **AVI** Avi-On
- ☐ **CA** Casambi
- ☐ **LV** Leviton
- ☐ **LT** Lutron
- ☐ **NL** nLight
- ☐ **PS** Philips/Signify
- ☐ **WA** Wattstopper
- ☐ **CU** Current nx
- ☐ **NO** No option

Consult Mercury Lighting for further information and other options.

Mercury should be notified if the controls are to be Wireless, Networked Lighting Controls, 0-10v Dimming, DMX, etc.

If controls aren't specified, the fixture ships 0–10V, 1% dimming, unified D/I control.

CUSTOM PAINT COLORS

- ☐ As Specified

MOUNTING

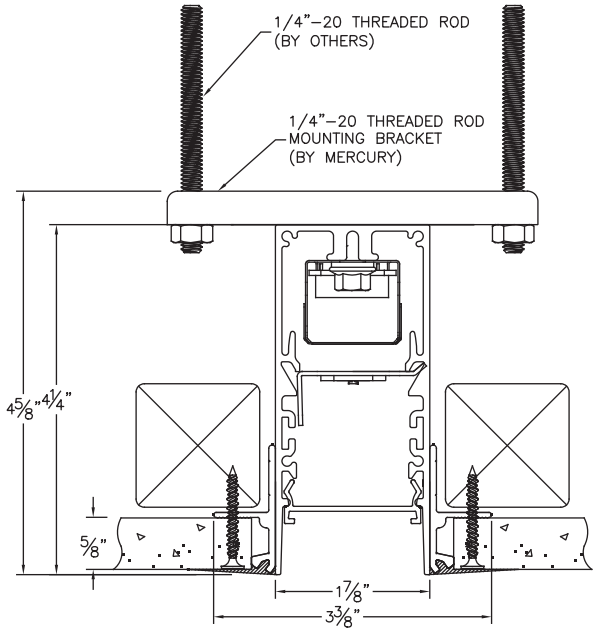

N5

Trimless 5/8"

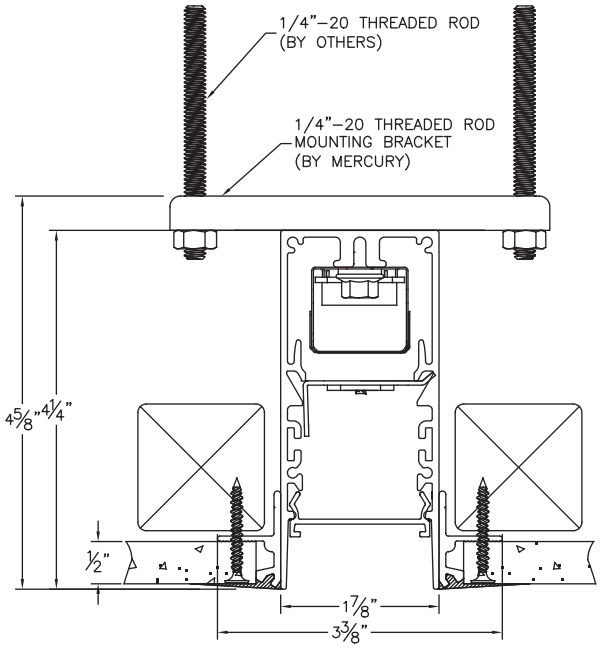

N1

Trimless 1/2"

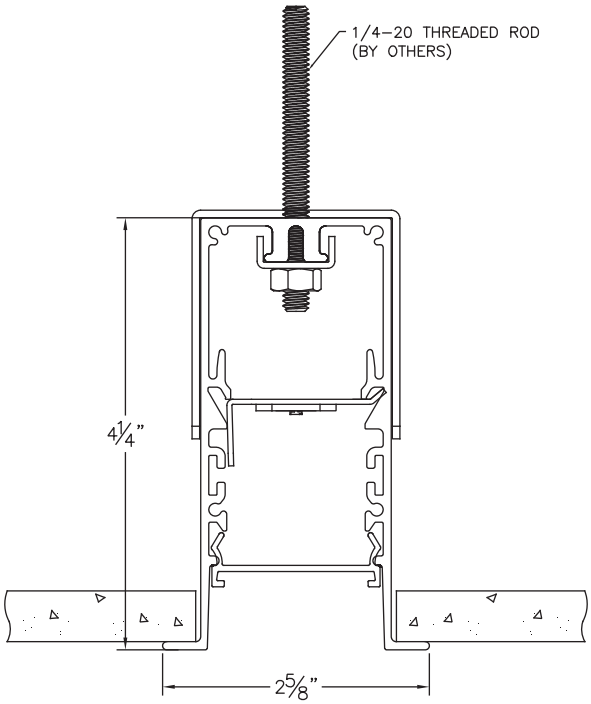

F

Flange Trim for drywall

MOUNTING

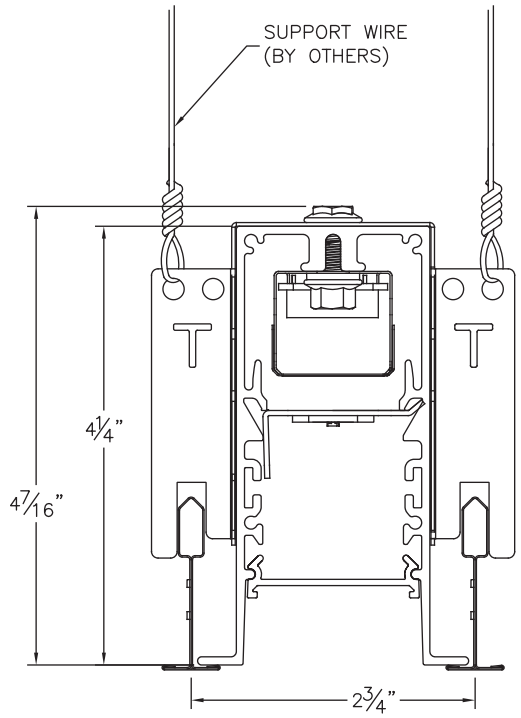

G9
Grid 9/16" flat T grid

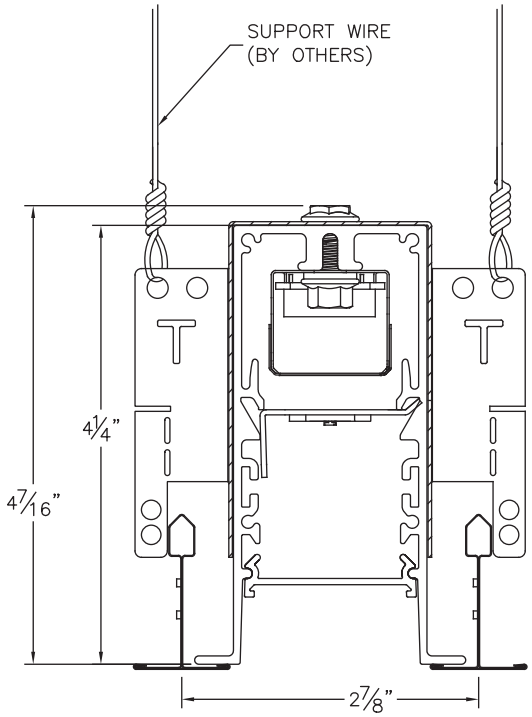

G15
Grid 15/16" flat T grid

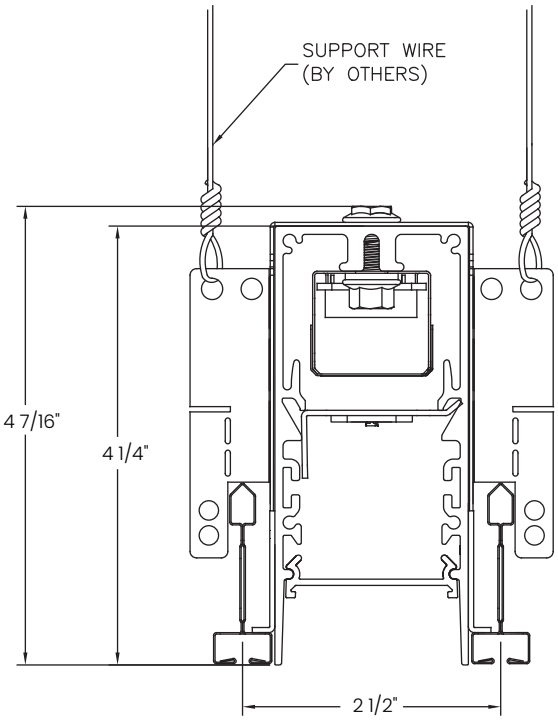

S
Screw Slot

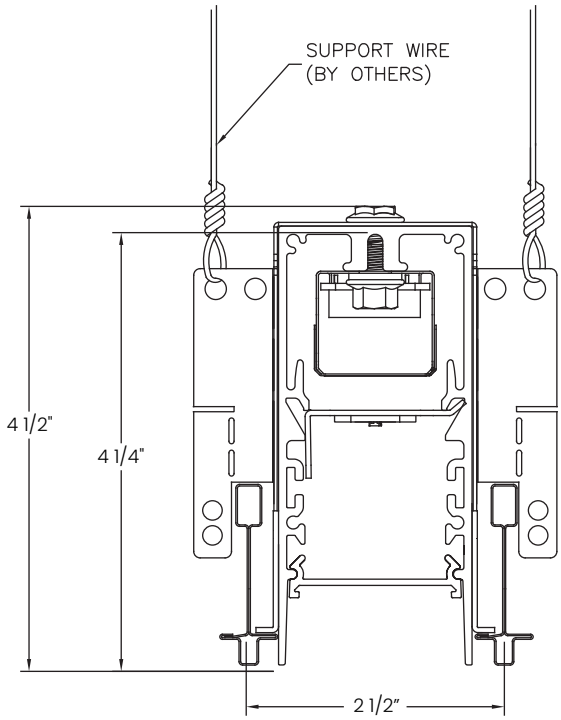

SI
9/16" Interlude

MOUNTING

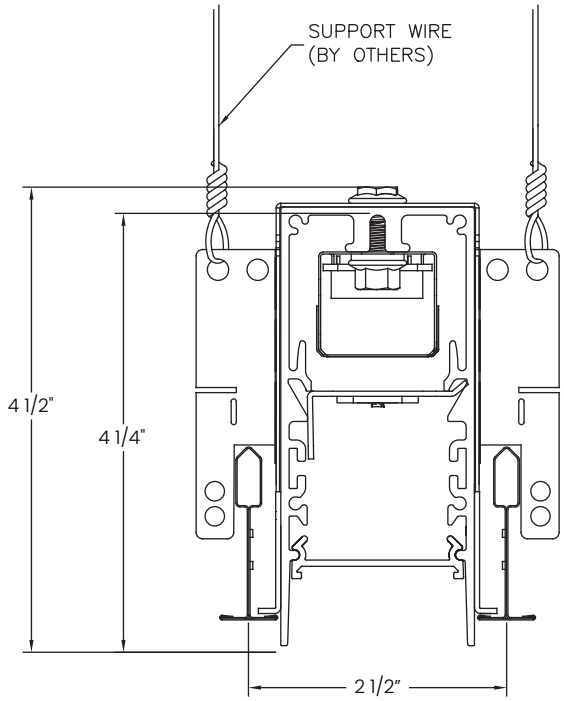

T9

9/16" Tegular

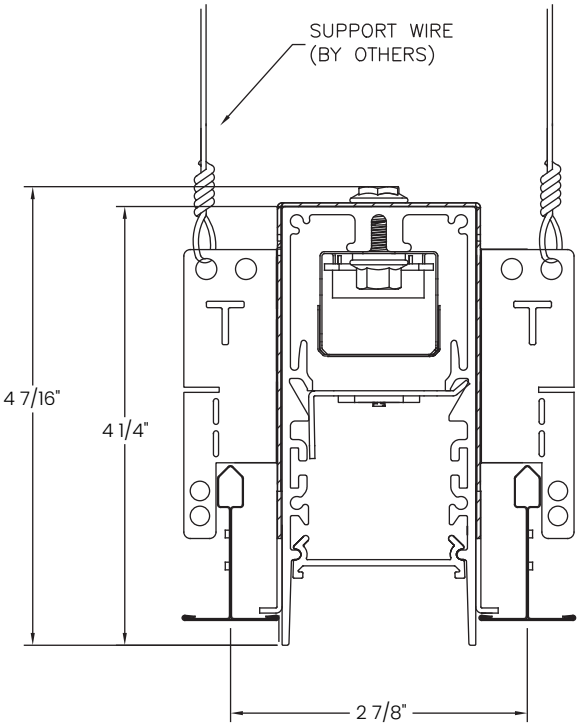

T15

15/16" Tegular

For surface and suspended options please visit the rest of the MLR2 family.

MLR2

REGRESSED LENS
RECESSED MOUNT FOR DRYWALL & GRID CEILINGS

MERCURY Lighting Products

HOUSINGS

Extruded aluminum profile in a 0.080-inch wall thickness. Maximum length of each linear component is 12-ft.
.060 aluminum ends are provided where needed at row termini.
A one-piece 14GA galvanized steel joiner/aligner bracket is provided for each joint between housings.
Internal cold-rolled steel components.
Housing intended for recessing into grid and drywall type ceiling systems. Trimless housing for plaster-in or overlapping flange trim. See ceiling types section.
A custom formulated non-glare matte-white polyester powder coating provides an extremely durable and long- lasting finish.

DIFFUSERS

Seamless fit diffusers. Flawless and consistent end-to-end fit.
Diffusers are regressed into housing.
HTA diffuser: extruded from custom formulated high transmission white acrylic material. Specify when the highest performance levels are required.
ASO diffuser: extruded from custom formulated smooth opal acrylic material. Specify when a more esthetically white appearance is desired.
Allows maximum light transmission while eliminating pixilation and hot spots.
Smooth finish compliments the architectural elements.

LED MODULES

High performance linear configured LED module boards.
Each board consists of multiple mid-power, high efficacy LEDs in a precise layout eliminating the need for supplemental heat sinking.
The boards produce an even and diffuse light which maximizes optical efficiency.
Compatible with the dimming performance of the LED driver.
Color temperatures available 80 CRI: 3000K, 3500K and 4000K.
Upon request: 5000K.
Color temperatures available 90 CRI: 2700K, 3000K, 3500K and 4000K.

TUNABLE WHITE OPTION

Field tunable range 2700K through 6500K.
80CRI.

LED DRIVERS

Factory programmable constant current LED power supply.
Multiple standard drive current outputs (factory set by Mercury) are cataloged with their corresponding lumens- per-foot offering. Upon request, custom drive current outputs and lumens-per-foot options are available.
Note: Certain cataloged lumens-per-foot offerings may be provided with a non-programmable constant current LED power supply at Mercury's discretion. Contact factory if critical.
Universal voltage input, 120V-277V, 50HZ-60HZ.
Continuous dimming capability down to 1%-standard. 0.1% available upon request.
Dim to Dark option available upon request.
Sensor ready (SR) drivers compatible with most lighting controls are optional. Consult factory.
Lutron driver available: LDE1 series.

STANDBY LIGHTING OPTIONS

Self-contained module, 10W or 12W as specified. Battery backup upon loss of power. Available in modules of 4-Ft. and longer. (Consult limited Lumens per foot packages).

CORNERS

Standard 90 degree corners. Custom angled corners.

INSTALLATIONS

Designed for recessed installation into drywall type ceiling systems and acoustical grid ceiling systems.
See ceiling types section.
Trimless housing requires plastering-in after installation.
Overlapping trim neatly closes off drywall opening.
Availability for various types; 15/16" grid, 9/16" grid, 9/16" screw-slot, 9/16" interlude.
Grid pry outs lock over top of gridwork. Auxiliary suspension required to building structure.
Lengths of 12-ft. and less to use one housing with two ends pre-installed.
Lengths over 12-ft. will be engineered to job requirements using multiple housings with one end pre- installed at each row end.
Lengths over 12-ft. will include appropriate job required quick-connect plug-thru wire harnesses and housing joiners.
Wiring access plate provided on top. End plates have 7/8" KO.

CERTIFICATE OF SAFETY COMPLIANCE AND LISTINGS

Luminaire: UL and CUL listed 1598 and bears their label. Suitable for damp locations.
IC rated.
Optional: Suitable for wet locations marking is available. Some limitations apply. Not IP rated. Contact factory for all details.
Some limitations apply. Contact factory for all details.
CCEA option meets the City of Chicago Environmental Air specifications.

LIGHTNING PROGRAM

Same quality product, shipped in 15 days or less (if drawings are required, 15 days or less starts after drawings are released).
Entire order must qualify for Lightning Program in order to meet freight charges. Please contact our sales team if unsure your order will qualify.
Options highlighted in Blue, 500 linear feet or less, are eligible for quick ship Lightning Program.
Relates to straight runs ONLY.
Other variations not highlighted in blue may be available under Lightning Program. Please consult factory.
Specify LP-MLR2 when placing order if you would like to use Lightning Program.

WARRANTY

5-year limited warranty is standard. Special 10-year warranty available on a job-to-job basis. Complete LED warranty terms available at www.mercltg.com
Actual performance may differ as a result of end-user environment and application.
Most LED luminaires are suitable to operate in ambient temperatures from -20C (-4F) to 25C (77F).
The following exclusions apply: Luminaires with standby lighting option, integral lighting controls options, or wireless control options. Consult factory.
LM-79 testing was measured under a controlled 25C (77F) ambient operating temperature.